EXPLODED VIEW & PARTS LIST

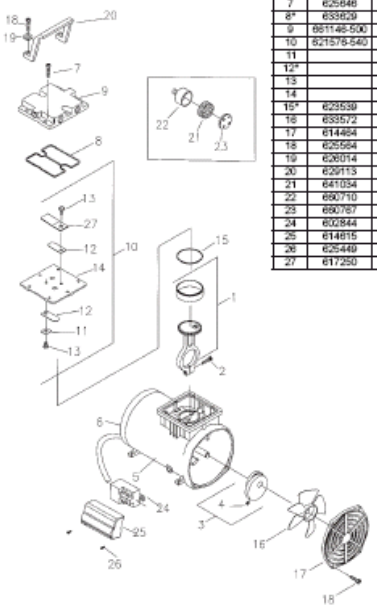

Item No.	Part No.	Component Part	Description	Qty
1*	668831		Connecting Rod Assembly	1
2	625114		Screw - Connecting Rod	1
3	667135		Ecc. & Bearing Ass'y.	1
4		625244	Set Screw - Eccentric	1
5	625660		Screw - Front Cover	4
6	620159-540		Motor End Cap Assembly	1
7	625646		Screw - Head	6
8*	633629		O-Ring Gasket - Head	1
9	661146-500		Head	1
10	621576-540		Valve Plate Assembly	1
11		617045	Valve Keeper	1
12*		621580	Valve Flapper - Intake & Exhaust	2
13		625446	Screw - Valve Flapper	4
14		662163-540	Valve Plate	1
15*	623539		O Ring - Sleeve	1
16	633572		Fan	1
17	614464		Front Cover	1
18	625564		Screw - Handle	2
19	626014		Washer - Handle & Capacitor Cover	4
20	629113		Handle	1
21	641034		Filter - Foam	1
22	660710		Filter Body	1
23	660767		Filter Body Cover	1
24	602844		Relay	1
25	614615		Capacitor Cover	1
26	625449		Screw - Capacitor Cover	2
27	617250		Valve Restraint	1

Item No.	Part No.	Description	Qty
30	602657	Pressure Switch	1
31	615779	Sleeve - Self Aligning	1
32	618112	Exhaust Tube	1
33	625826	Unloader Tube	1
34	624525	Fitting	1
35	624273	Drain Cock Assembly	1
36	624361	Elbow - Unloader Tube	1
37	624654	Bumper	1
38	625106	Insert-Unloader Tube	4
39	624511	Insert-Exhaust Tube	1

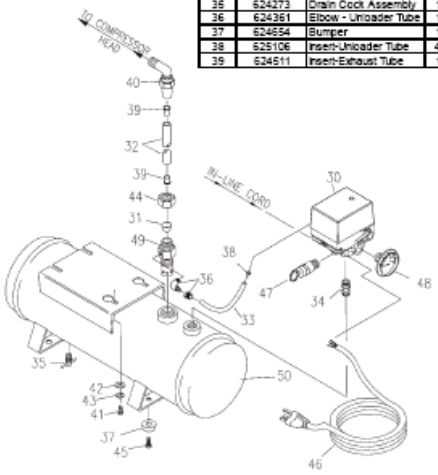

Item No.	Part No.	Description	Qty
40	624484	Connector - Head	1
41	625206	Screw-Cprsr. Mounting	4
42	626563	Washer- Cprsr. Mounting	4
43	626509	Lock Washer-Cprsr. Mtng.	4
44	626766	Nut - Compression	1
45	625406	Screw - Bumper	4
46	633660	Cord	1
47	633957	Safety Valve	1
48	638262	Gauge - Pressure	1
49	638322	Check Valve Assembly	1
50	669470-540	Tank Assembly	1

*** Parts Included in Rebuild Kit part number 1914**
Part 644007 - Hex Key (Not Shown)